

NEW PRODUCTS BROCHURE

FIREPLACES FOR EVERY HOME. EVERY FUEL. EVERY FUTURE.

2026

product launches

We are proud to present our latest fireplaces and stoves for the coming season. This collection has been developed in response to current market demand and incorporates the latest technologies.

In this brochure, you will find a concise overview of our latest models in the following categories:

- Electric fireplaces, for sustainable solutions and easy installation
- Gas fireplaces, with a choice of natural gas and (bio)propane
- Wood-burning stoves, combining high efficiency with low emissions

All our products are designed with a focus on user experience, design and ease of installation. This means we can offer a high quality solution for every situation.



contents

DRU brands	2-3
Introduction	4-5
DRU electric product range	6-9
• “All fuels” electric	
• DRU Valo	
DRU gas product range	10-11
• “All fuels” gas	
• DRU Global Ivar 5 CF	
Dik Geurts wood product range	12-15
• “All fuels” wood	
• GreenBlocks environmentally friendly heating	
• Instyle Triple U 700	
Spartherm wood product range	16-19
• “All fuels” wood	
• CAIR smart fireplace features	
• Premium Triple 50x90x50	



our brands

DRU gas fires are renowned for combining high efficiency with ultimate ease of use. Thanks to flexible installation options and compatibility with various types of gas, they offer a future-proof solution for a wide range of applications and markets.

DRU's electric fires offer maximum design freedom and an ultra-realistic flame experience, with zero emissions.

With simple plug-and-play installation and smart control options, they are ideal for modern homes and projects without a flue.

Dik Geurts develop modern wood-burning stoves that combine efficiency, sustainability and character. With sophisticated technology and a contemporary design, the brand offers reliable wood-burning solutions that meet the strictest environmental standards.

Spartherm represents the pinnacle of wood-burning fireplaces, combining German precision with high-quality craftsmanship. The fires and stoves combine striking design with long-lasting performance and are designed for stylish applications and high-end interiors.

fire specialists since 1754

For over 270 years, DRU has stood for craftsmanship, quality and innovation. Building on our rich history, we continue to evolve, with a clear focus on the future. Our core values form the foundation of everything we do.





Scan the QR code and watch the DRU corporate video

INNOVATION

We continue to challenge ourselves to improve. By maintaining a critical eye, remaining open to feedback and investing in innovation, we are constantly building the future of fire.

EASE OF USE

The user is at the heart of every development. By working closely with dealers and partners, we create smart, comfortable and intuitive products that make everyday life easier.

SUSTAINABILITY

We strike a responsible balance between people, the environment and efficiency. Our fireplaces are developed in accordance with the highest environmental standards, and we are constantly seeking cleaner and more sustainable solutions.

RELIABILITY

Our approach is based on transparency and trust and we deliver on our promises. For generations, we have been designing and manufacturing fireplaces that stand for quality, safety and long-lasting performance.

working together for success

Dear business partner,

Heat is more than just a source of comfort. It brings people together, creates atmosphere and forms the heart of every room. Guided by this belief, DRU has been developing fireplaces for generations that are not only functional but also enhance the experience, design and quality of life.

In this brochure, we invite you to explore our vision of fire and the role it plays in modern interiors. Innovation and craftsmanship go hand in hand. We are constantly seeking new ways to combine technology, sustainability and aesthetics, ensuring our solutions seamlessly meet the needs of today and tomorrow.

What drives us is the ambition to push boundaries without losing sight of our principles. Whether it concerns innovative electric fireplaces, stylish gas fireplaces or the authentic experience of a wood fire: every development is designed with an eye for detail, quality and comfort. This publication showcases what we stand for: not just the products we make, but above all the experience we aim to create -- warmth, comfort and timeless quality.

We hope you find plenty of inspiration.

Kind regards,
Raymond Zantinge
Managing Director





Jan Willem Hendriksen
Marketing- and Sales Manager
Mobile +31 6 12 65 80 00
Phone +31 26 319 53 19
E-mail j.willemhendriksen@drufire.nl



Joost Aldus
International Account Manager
Mobile +31 6 82 69 09 15
Phone +31 26 319 53 77
E-mail j.aldus@drufire.com



Niall Deiraniya
UK General Manager
Mobile +44 07867 527 927
Phone +44 161 793 8700
E-mail n.deiraniya@drufire.co.uk

All fuels electric,

Valo
130–150 range

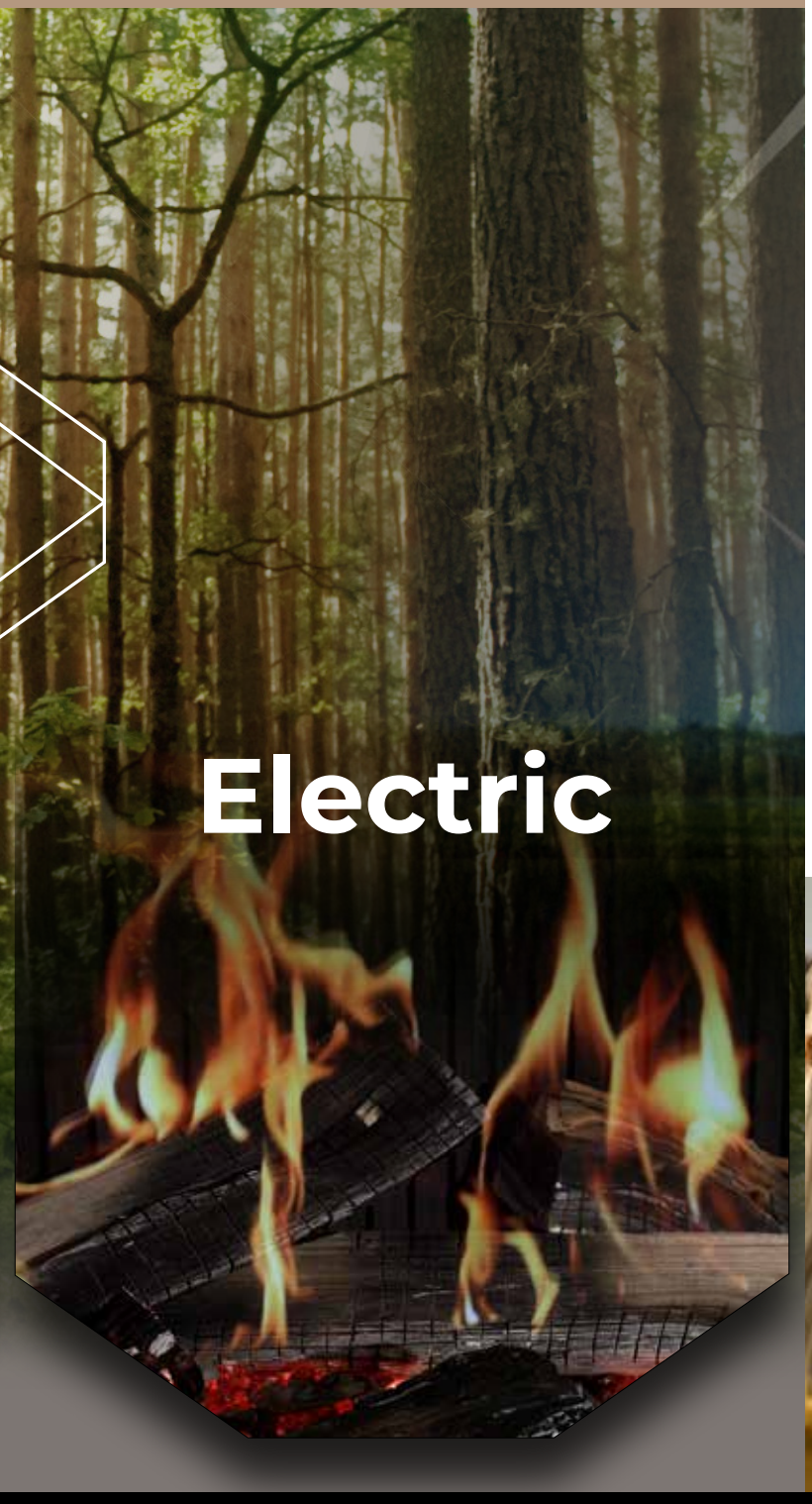

Electric

The full experience of a fireplace, without any emissions. With simple plug-and-play installations and no need for a flue or chimney, you can install a DRU electric fire anywhere.

- Easily adjust the height and speed of the flames
- The LED glow bed can be controlled via the app to display any colour, brightness level and a range of atmospheric effects
- LED splitter cable for additional breast lighting optional

Comes with a ceraglass interior as standard

Plug & play system

Remote control and app

Heating 1000–2000 watts

Maintenance-friendly



DRU Valo

New range of electric fireplaces

One unit
A single, complete unit that allows for multiple configurations. This makes installation quicker, simpler and more efficient. The fireplaces are available in 130 and 150 cm widths and can be easily installed as a front-, two-sided or three-sided fireplace. And all this from a single base unit.
Thanks to the shallow installation depth (just 29 cm) and optimal proportions, the units fit perfectly into applications such as cinema walls and modern interiors.

Real wood
The flame effect creates an atmospheric and lifelike fire experience that immediately catches the eye in the showroom. Each unit is fitted with a Purewood log set, each with its own unique wood grain. The combination of real wood logs and wood chips creates a vibrant, organic impression.

Made in Europe
Valo electric fireplaces are entirely assembled in-house at our facility in Duiven, the Netherlands. This guarantees high-quality materials, consistent quality and a top-class finish.

No compromises on construction or aesthetics – just a product that meets the highest European standards.

An electric fireplace that excels in experience, quality and ease of use, making it a valuable addition to your showroom.



Valo 130

DRU
Valo 130

available in mid September 2026

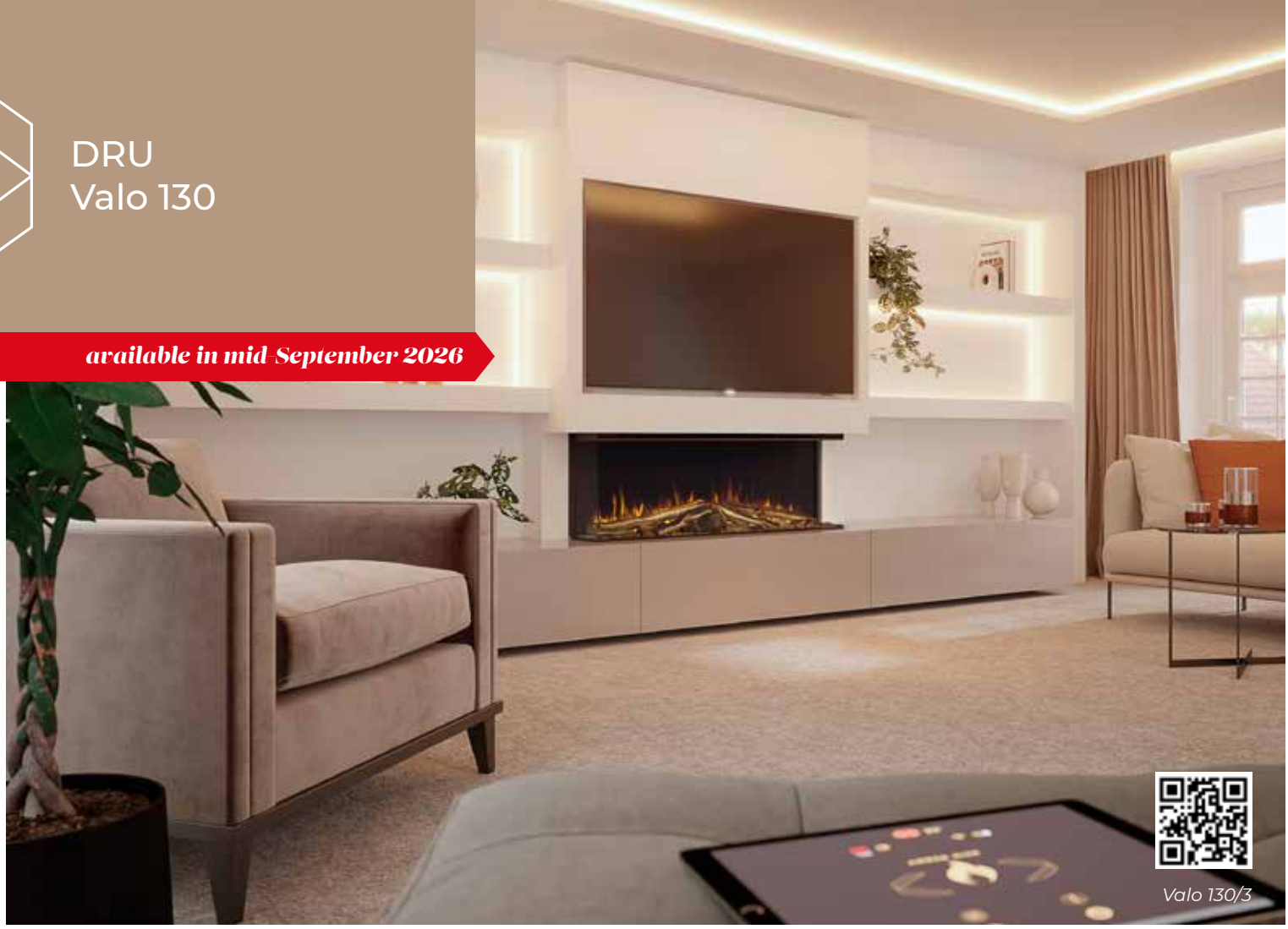

Valo 130/3

Compact in size.
Big on experience

The Valo 130 is the ideal electric fireplace for compact living spaces and modern applications such as cinewalls. With its balanced dimensions, this fireplace fits perfectly with the most common TV sizes, creating a harmonious whole.

The realistic flame effect and the logs made of real wood ensure a realistic fire experience.
Thanks to its clever design, the fireplace can easily be configured as a front, two-sided or three-sided fireplace.

It all adds up to an accessible and versatile solution that fits perfectly into almost any interior.

MADE IN EUROPE

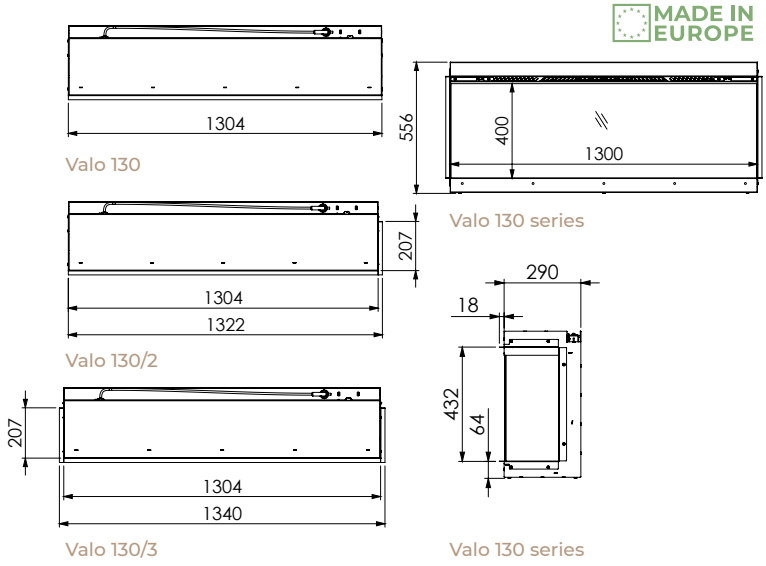

Features:

Flame image	Valo-Flame technology
Burnerbed	Log set Purewood and Eco Glow (LED glow bed)
Interior	Ceraglass
Heating	1000-2000 Watt (thermostatic and weekly program)
Control	Remote control and app (Bluetooth)

Choose your own size:

130 - 130/2 - 130/3

150 - 150/2 - 150/3

DRU
Valo 150

available in mid September 2026



Valo 150/2

Bigger.
More impactful

The Valo 150 offers an impressive fire experience with a wider view of the flames. This fireplace is ideally suited to medium-sized to larger living spaces and projects where the fire plays a prominent role in interior design.

The flexible design allows for a variety of installations, fully tailored to the customer's requirements.

A striking feature that takes any space to a whole new level.

MADE IN EUROPE

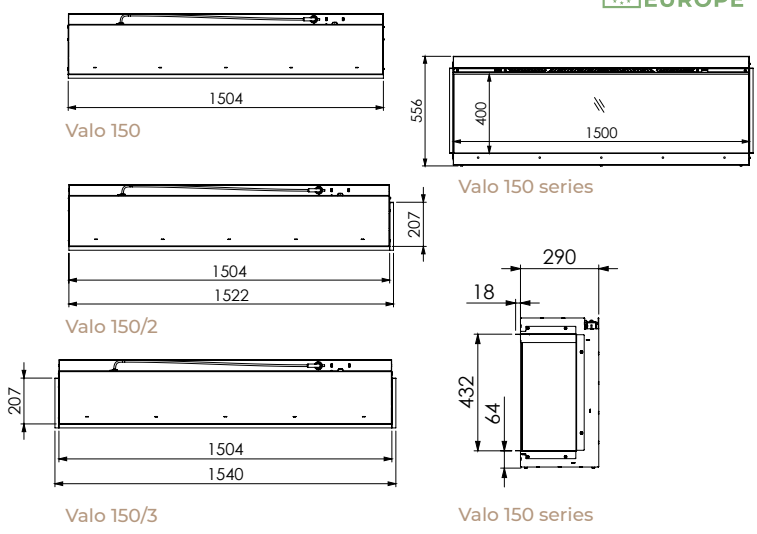

Features:

Flame image	Valo-Flame technology
Burnerbed	Log set Purewood and Eco Glow (LED glow bed)
Interior	Ceraglass
Heating	1000-2000 Watt (thermostatic and weekly program)
Control	Remote control and app (Bluetooth)

Choose your own size:

130 - 130/2 - 130/3

150 - 150/2 - 150/3

All fuels gas,

Global Ivar 5 CF

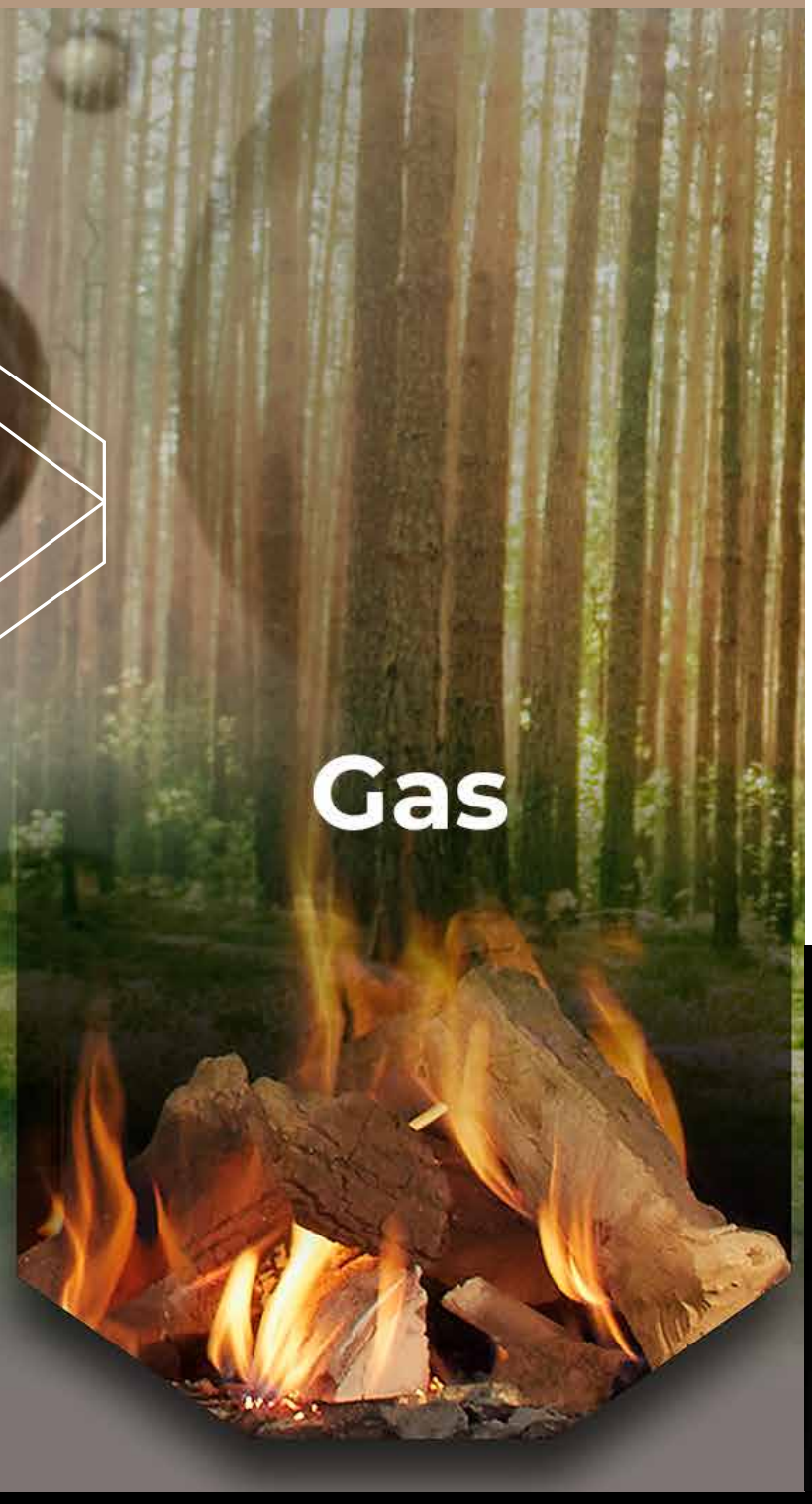

Gas provides instant heat and a flame pattern that is easy to control.
Our modern fireplaces offer the perfect combination of comfort and efficiency.

- Control the fire easily with the remote control
- Maintain full control over the heat from the fire
- No fixed mains gas connection?
  Enjoy the full play of flames from a (bio)propane gas fireplace
- Clean combustion without ash, soot or particulate matter
- Gas appliances are designed to utilise a blend of up to 20% hydrogen in natural gas



Cast iron door

- Robust appearance
- Retains heat
- Durable material
- Long lifespan

DRU
Global Ivar 5 CF

available soon



Global Ivar 5 CF

The perfect gas stove for a wide audience

New to the range is the Global Ivar 5 CF, developed for a market ~~in~~ which there is steady demand for freestanding gas fireplaces with open combustion (conventional flue).

Based on the successful Ivar 5 design, a compact and efficient gas fireplace has been developed that fits perfectly into smaller living spaces. The full flame effect – whether using natural gas or (bio)propane – creates a natural fire experience. With the focus on simple installation, ~~-~~ease of maintenance and a high standard of quality, this is a product that is easy to sell and widely versatile.

A smart choice within an attractive price range.

Global Ivar 5 CF

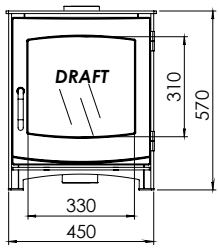

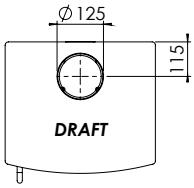

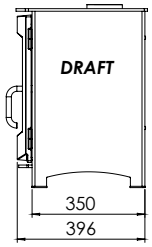

Features:

Flame pattern	TruFlame Burner®
Burner bed	Log set brown
Interior	Ceraglass
Control	Remote control

Combustion	Open combustion (chimney connection)
Technical specifications	Available shortly at www.drufire.com

All fuels wood, GreenBlocks



Wood

Dik Geurts
Creation of flames

A wood-burning stove creates the ultimate, authentic fire experience. Thanks to its natural yet contemporary look, wood remains a popular choice.

- Enjoy the sound and ambience of a real, authentic fire
- DG Smart Assist for optimal control of the wood fire via the DRU Fire app
- Remain completely independent of the power grid and energy suppliers
- Choose an eco-friendly option thanks to renewable fuel
- With modern and efficient stoves, virtually no heat is lost



Orbe, High

pioneering a **NEW** standard in wood-burning stoves **GREENBLOCKS**

With GreenBlocks from Dik Geurts, wood burning is greener than ever.

Thanks to this smart system, the wood-burning stove can easily be upgraded with eco-friendly options. This provides maximum flexibility in how sustainably and environmentally consciously you heat your home.

GreenBlocks has been developed for those looking for a sustainable and customizable heating solution.

ECO DESIGN



DG Filter (fine dust filter):
Up to 75% less fine dust emissions

OR

DG Therm (heat storage):
Extra hours of heat without additional fuel

DG Cat (catalytic converter):
Up to 50% less CO emissions (carbon monoxide)

DG Smart Assist (automatic air slide):
Optimal combustion and saving on wood

DG Room Sealed/RS (closed fireplace):
Air supply comes entirely from outside (for airtight/passive houses)

Scan this QR code for more information

Dik Geurts
Instyle Triple U 700

available autumn 2026



Instyle Triple U 700

Experience fire from every angle



Easy to clean thanks to the hinged window

The Instyle Triple U 700 has been designed for anyone looking for a wood-burning fireplace that offers the ultimate fire experience.
With its three-sided view of the fire, it forms the perfect focal point of the room and it serves as a room divider that is ideal for connecting two spaces in an atmospheric way.
The Instyle Triple U 700 is particularly well-suited for modern interiors and open-plan living spaces, where design and atmosphere come together.
In addition to its striking design, this fireplace also offers excellent performance in line with the latest standards and meets the most stringent environmental requirements.

A fireplace that immediately catches the eye in the showroom and inspires consumers.



DG Smart Assist

Advantages:

- Premium design with a three-sided view of the fire
- Hinged doors on 2 (long) sides
- Heat-reflective infrared glass
- Optional:
  - 8S built-in frame
  - Self-closing door
  - Raised ash collector

Instyle Triple U 700

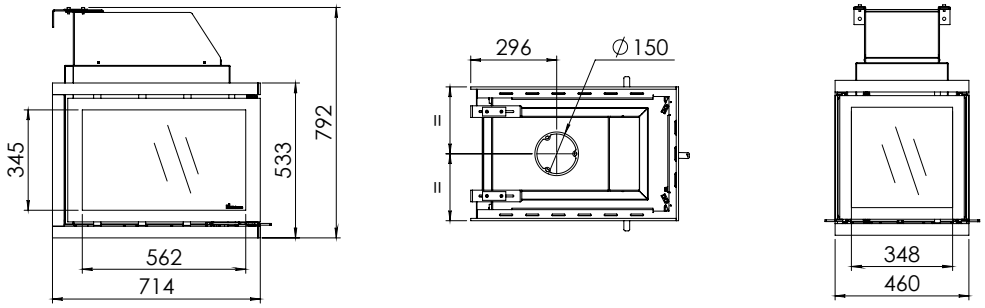

Features:

Interior	Vermiculite natural
Technical speci ications	Output range 8,0 - 12,0 kW, more info shortly at www.drufire.com
Frame included	Fixed frame ü0 mm
Combustion	- EA, open/standaard, external airkit optional
	- RS, closed/optional, external airkit included

GreenBlocks options:

DG Cat (in combination with DG Smart Assist))
DG Smart Assist
DG Room Sealed

All fuels wood,

CAIR

SPARTHERM®
THE FIRE COMPANY



Wood

A wood-burning stove brings the authentic experience of a real fire into your home. The combination of a natural look and contemporary design makes wood a consistently popular choice.

- Enjoy the sound and atmosphere of a real fire
- Spartherm CAIR for optimal experience and app control
- Independent of the mains supply and energy suppliers
- An environmentally conscious choice thanks to renewable fuel
- Modern, efficient stoves make the most of the heat

Spartherm Premium Triple room dividers



CAIR

Experience fire like never before -

smart, stylish and forward-thinking

With CAIR's smart fireplace features, the fireplace experience becomes not only more comfortable, but also more efficient, safer and more environmentally friendly. For high-quality Spartherm fireplaces, well-designed options are available that offer clear benefits when burning wood: from intelligent control via an app to automatic regulation of the air supply.

Everything is designed with both aesthetics and ease of use in mind, featuring technology that is ready for the future. To ensure optimal performance, the chosen options are already taken into account during production. Retrofitting is not possible.
Below is a brief overview of the various fireplace options.



S-ESAM
(Electronic elevating door system)

S-ELA
(Electronic flue gas damper)

S-USI
(Monitoring chimney pressure)

S-KAT
(Catalytic converter reduces particulate matter and CO emissions)

S-THERMATIK NEO
(Automatic air control, built in fires)

S-THERMATIK NEO BASIC
(Automatic air control, stoves)

ECO DESIGN

Scan this QR code for more information

Spartherm Premium Triple 50x90x50

available autumn 2026



Premium Triple 50x90x50

SPARTHERM®
THE FIRE COMPANY

A three-dimensional fire experience



Easy to clean thanks to the hinged window



Integrated handle in the frame

The Spartherm Premium Triple 50x90x50 is designed for those who refuse to compromise on the view of the fire or on design. With its three-sided glass panel, this built-in fireplace creates an impressive panorama of flames, bringing the fire to life from virtually every corner of the room.

In addition to its aesthetic appeal, the Premium Triple 50x90x50 guarantees high-quality performance. Thanks to its advanced combustion technology, this fireplace meets the strictest European environmental standards and offers an efficient and sustainable heating experience.

A real eye-catcher that not only provides warmth but also makes a dramatic statement in any room.

Advantages:

- Elevating-door fireplace with an exclusive design and a three-sided view of the fire
- Ideal as a stylish room divider in any living space
- Hinged doors on two (long) sides
- High efficiency and an attractive power range

Premium Triple 50x90x50

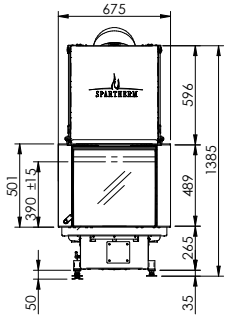

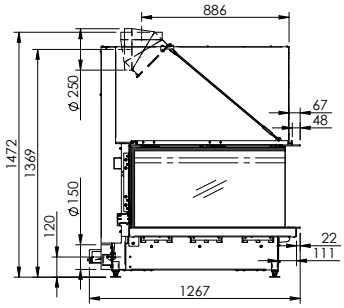

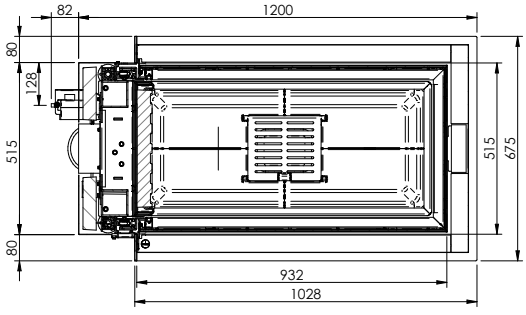

Features:

Output range	12,3 - 22,8 kW
Efficiency:	80,6% A
Maximum log length	33 cm
Interior	White or black chamotte
Frame included	8-sided solid frame
Combustion	RLA, open

CAIR options:

S-THERMATIK NEO
S-ESAM
S-USI
S-KAT

i am dru since 1754

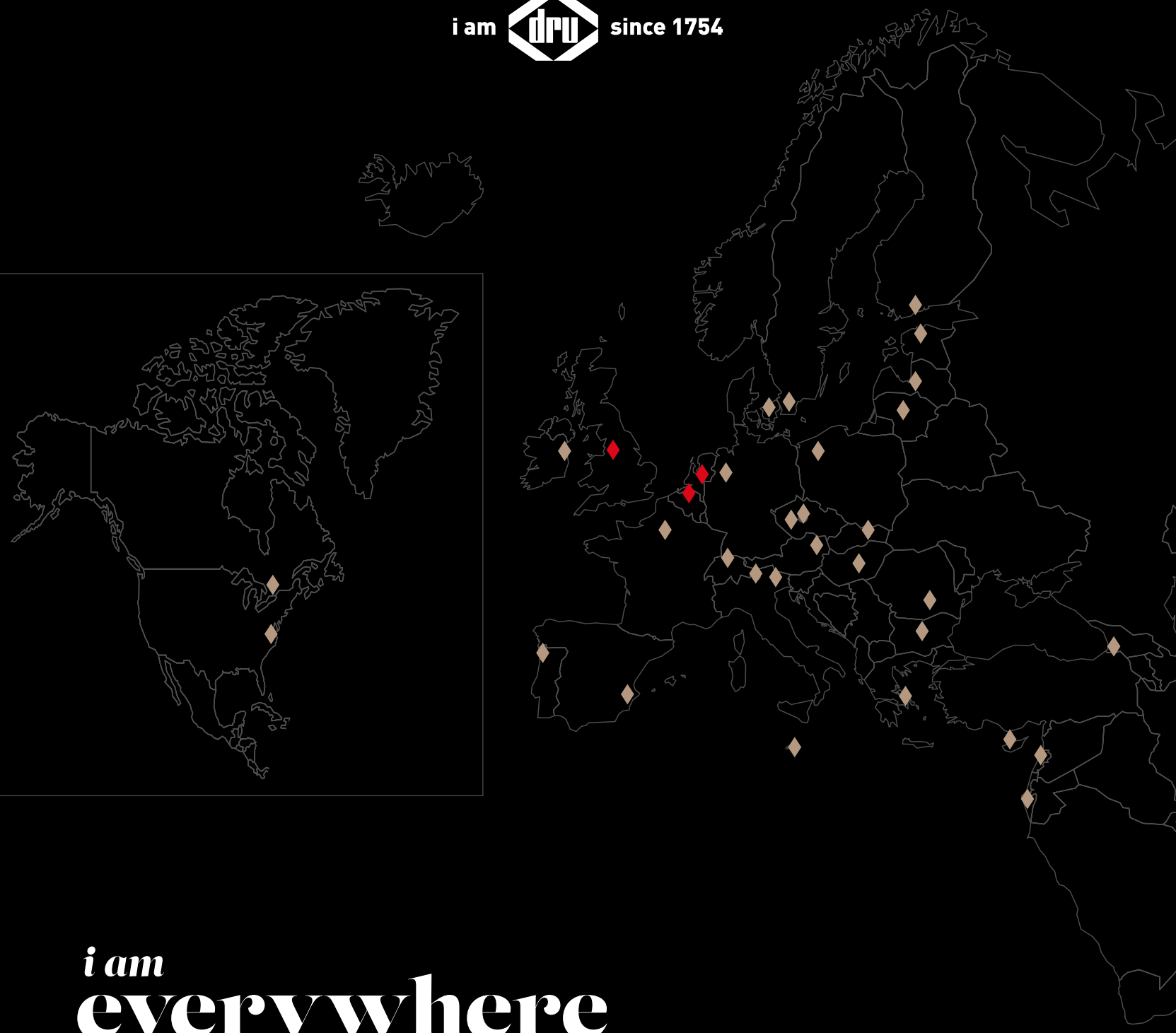

i am everywhere

DRU Verwarming B.V.
P.O. Box 1021 | 6920 BA Duiven
Ratio 8 | 6921 RW Duiven
The Netherlands
T. +31 (0)26 - 319 5 319
www.dru.nl

Drugasar Ltd.
Deans Road | Swinton
Manchester | M27 0JH
United Kingdom
T. +44 (0)161 - 793 8700
www.drufire.co.uk

DRU Belgium
Kontichsesteenweg 69/1
2630 Aartselaar
Belgium
T. +32 (0)3 - 450 7000
www.drufire.be

www.drufire.com

BY APPOINTMENT OF
THE COURT OF THE NETHERLANDS

FSC
www.fsc.org
MIX
Paper from responsible sources
FSC® C114687

Art.933374 | 2026-06

DRU: Member of the Spartherm-Group

Subject to changes. The colours, appearance and flame pictures in this brochure may differ from reality.
Nothing in this publication may be used without prior written consent from DRU Verwarming B.V.

SOCIAL MEDIA :
For further inspiration and information, please see one of our social media channels or scan the QR code.